No.	Revision	Date	Name
1	PN Change from 1M-101-00	05/11/2013	B.G.YUN
2	Dia. Change from ø3.6 to ø3.2	24/01/2014	B.G.YUN

SPECIFICATIONS

Impedance ; 50ohm
Frequency ; DC~6GHz
V.S.W.R ; 1.10+0.075xF(GHz)
Voltage rating; 170 VRMS
Temperature range : -55°C to +155°C
2002/95/EC (RoHS) : Compliant

RoHS Compliant

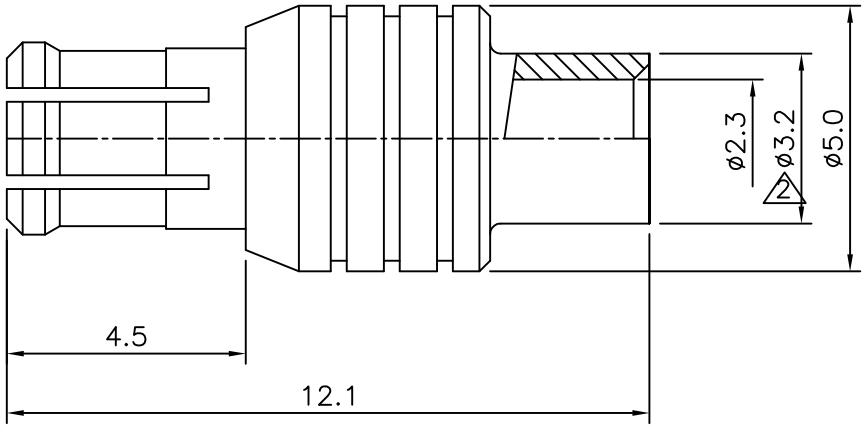

MCX STRAIGHT PLUG
for Cable-UT085,RG405

Connector parts	Materials	Finish
Body	Brass	Gold Plated
Outer contact	Be-Cu	Gold Plated
Center contact	Brass	Gold Plated
Insulator	TEFLON	-

NO.	DESCRIPTION	Q'TY	MATERIAL	FINISH	REMARKS.
PARTS No.	MCX-101-001	NAME	MCX-SP-085		APPROVED
MATERIAL	FINISH	TOLERANCES OTHERWISE SPEC. ±0.05 ANGLES ±1°			CHECKED
		SCALE	UNIT mm		DESIGNED S.J.LEE
CUSTOMER	DONGJIN TI.	DWG NO.	MCX-101-001		DATE. 2001.5/04