No.	Revision	Date	Name
1	PN Change from 1X-210-00	12/FEB/2014	S.J.PARK

SPECIFICATIONS
- Impedance ; 50ohm
- Frequency range ; DC~6GHz
- V.S.W.R : 1.3:1max @6GHz
- Working voltage : 170 VRMS
- Temperature range : -55°C to +155°C

RoHS Compliant

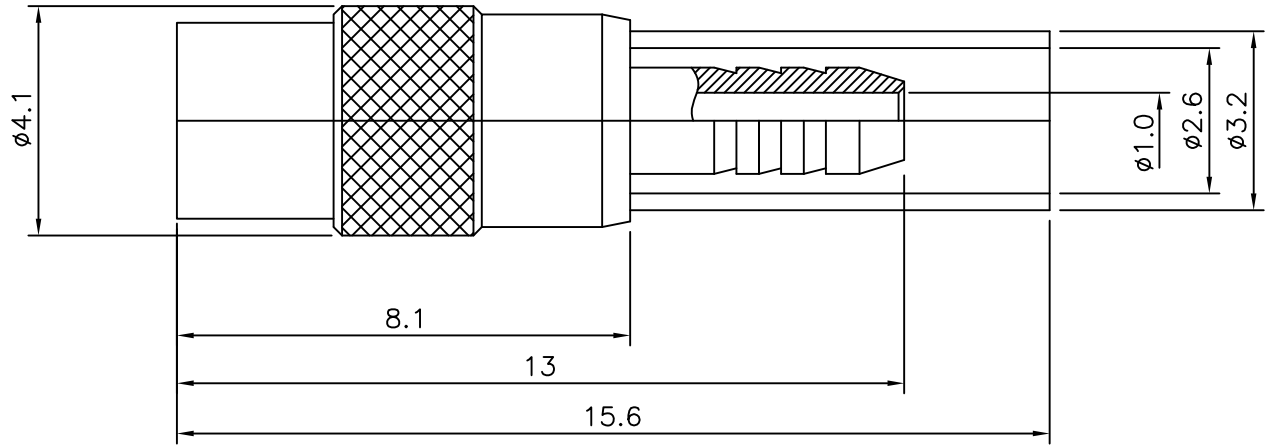

MMCX-Straight-JACK
for Cable-RG178

Item	Materials	Plating
Body	Brass	Gold Plated
Center contact	Be-Cu	Gold Plated
Ferrule	Brass	Gold Plated
Insulator	PTFE	-

NO.	DESCRIPTION	Q'TY	MATERIAL	FINISH	REMARKS.
PARTS No. MMCX-210-001		NAME MMCX-SJ 178			APPROVED
MATERIAL	FINISH	TOLERANCES OTHERWISE SPEC. ±0.05 ANGLES ±1°			CHECKED
		SCALE	UNIT mm		DESIGNED S.J.LEE
CUSTOMER	DONGJIN TI.	DWG NO. MMCX-210-001			DATE. 02/SEP/2008