No.	Revision	Date	Name
1	PN Change from 1N-114-00	17/06/2013	B.G.YUN

SPECIFICATIONS

Impedance ; 50ohm

Frequency ; DC~6GHz

Working Voltage; 1,000 VRMS

VSWR ; max 1.25:1 UP TO 2.5GHz

Temperature range : −55°C to +165°C

RoHS Compliant

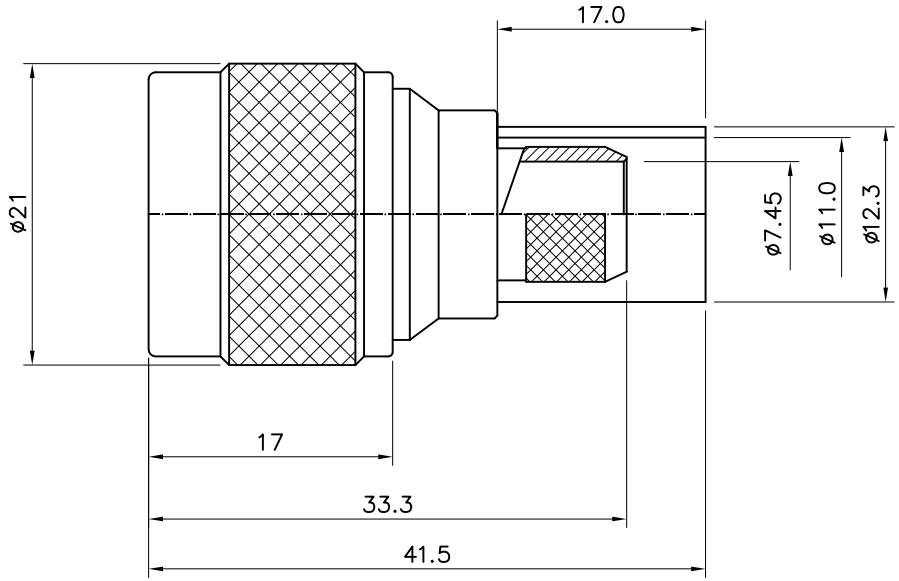

N-Type Straight PLUG
For CABLE RG214

Connector parts	Materials	Finish
Coupling Cap	Brass	Nickel Plated
Body	Brass	Nickel Plated
Center contact	Brass	Gold Plated
Insulator	TEFLON	–
Ferrule	Brass	Nickel Plated

NO.	DESCRIPTION	Q'TY	MATERIAL	FINISH	REMARKS.

PARTS No. N-114-001	NAME N Type-SP-RG214	APPROVED
MATERIAL / FINISH	TOLERANCES OTHERWISE SPEC. ±0.05 ANGLES ±1°	CHECKED
	SCALE / UNIT mm	DESIGNED S.J.LEE
DONGJIN TI.	DWG NO. N-114-001	DATE. 2001.05/07

CUSTOMER