No.	Revision	Date	Name
1	PN Change from 1N-124-04	02/JUL/2014	S.J.PARK
2	PN Change from 1N-124-00	02/JUL/2014	S.J.PARK

SPECIFICATIONS

Impedance ; 50ohm

Frequency ; DC~6GHz

Working Voltage; 1,000 VRMS

VSWR ; max 1.25:1 UP TO 3.0GHz

Temperature range : -55°C to +155°C

RoHS Compliant

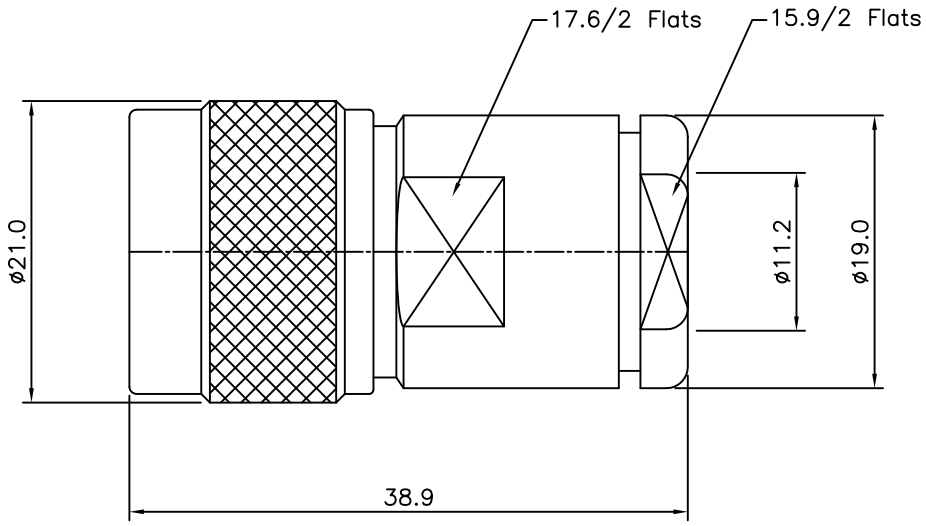

N-Type Straight PLUG
For CABLE RG214,RG213,LMR400 CLAMP

Item	Materials	Plating
Body	Brass	Nickel Plated
Back Nut	Brass	Nickel Plated
Center contact	Brass	Gold Plated
Insulator	PTFE	-
Seal	Silicone rubber	-

NO.	DESCRIPTION	Q'TY	MATERIAL	FINISH	REMARKS.
PARTS No. N-114-003		NAME N Type-SP-RG214			APPROVED
MATERIAL	FINISH	TOLERANCES OTHERWISE SPEC. ±0.05 ANGLES ±1°			CHECKED
		SCALE	UNIT mm		DESIGNED S.J.LEE
		DWG NO. N-114-003			DATE. 07/MAY/2006

CUSTOMER

DONGJIN TI.