No.	Revision	Date	Name
1	PN Change from 1N-324-00	24/FEB/2014	S.J.PARK
2	PN Change from 1N-324-04	24/FEB/2014	S.J.PARK

SPECIFICATIONS

Impedance ; 50ohm

Frequency ; DC~6GHz

Working Voltage; 1,000 VRMS

VSWR ; max 1.25:1 UP TO 3.0GHz

Temperature range : -55°C to +155°C

RoHS Compliant

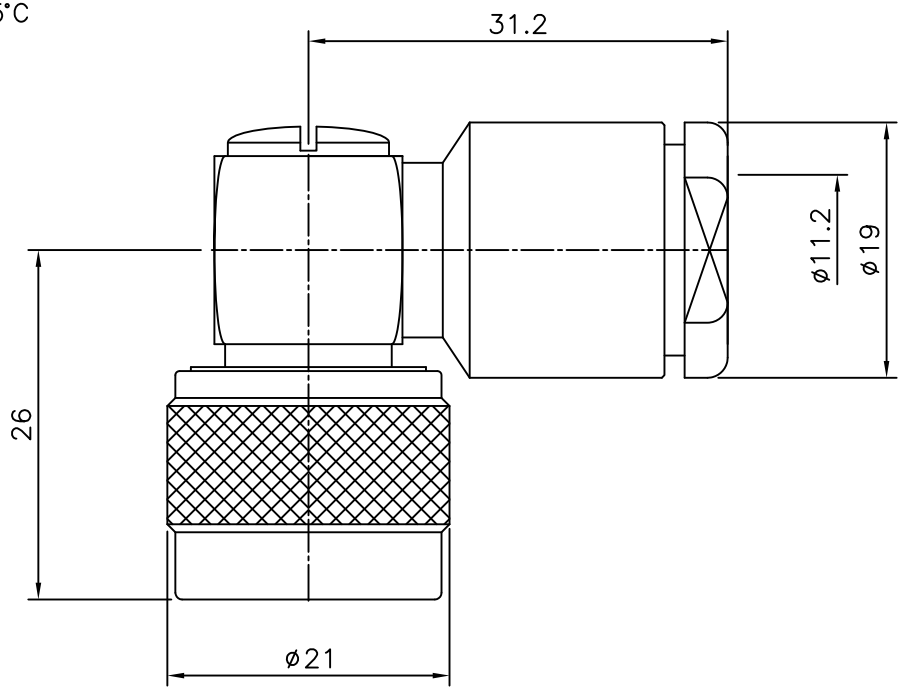

Item	Materials	Plating
Body	Brass	Nickel Plated
Coupling Cap	Brass	Nickel Plated
Center contact	Brass	Gold Plated
Insulator	PTFE	-
Seal	Silicon rubber	-

N-Type Right anle PLUG
for LMR400,213,214CLAMP

NO.	DESCRIPTION	Q'TY	MATERIAL	FINISH	REMARKS.
PARTS No. N-314-004		NAME N R/A PLUG-LMR400			APPROVED
MATERIAL	FINISH	TOLERANCES OTHERWISE SPEC. ±0.05 ANGLES ±1°			CHECKED
		SCALE	UNIT mm		DESIGNED S.J.LEE
		DWG NO. N-314-004			DATE. 05/SEP/2007

CUSTOMER

DONGJIN TI.