No.	Revision	Date	Name
1	PN Change from 1N-811-00	19/MAY/2014	S.J.PARK

Specifications

Frequency range ; DC~11GHz
Nominal Impedance ; 50 OHm
Working voltage; 1000V rms
Proof Voltage ; 2500 Volts
VSWR; 1.2:1 max. @ DC~9GHz
Oper. Temprature range ; -55~+145°C

RoHS Compliant

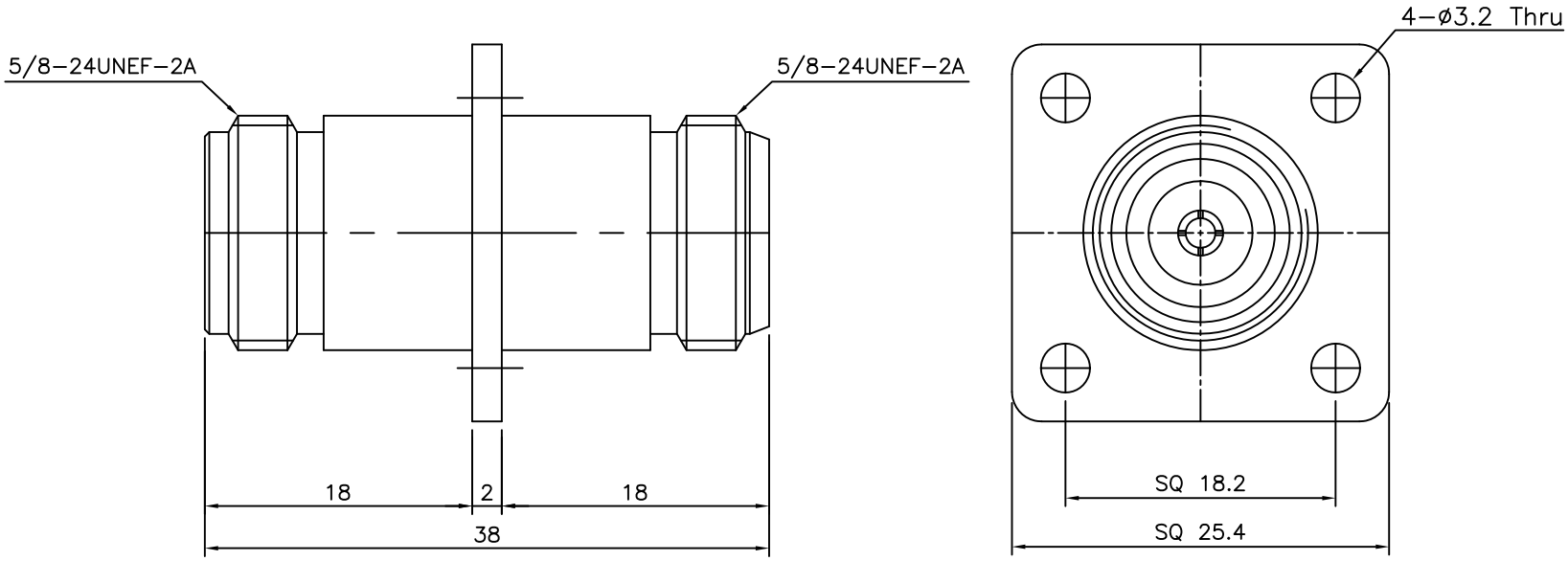

N PANEL 4H-JACK TO JACK ADAPTOR

Item	Materials	Plating
Body	Brass	Nickel Plated
Center contact	Beryllium copper	Gold Plated
Insulator	PTFE	-

NO.	DESCRIPTION	Q'TY	MATERIAL	FINISH	REMARKS.
PARTS No. N-805-001		NAME N-F4H J-J ADAP			APPROVED
MATERIAL	FINISH	TOLERANCES OTHERWISE SPEC. ±0.05 ANGLES ±1°			CHECKED
		SCALE	UNIT mm		DESIGNED S.J.LEE
CUSTOMER	DONGJIN TI.	DWG NO. N-805-001			DATE. 29/JAN/2009