No.	Revision	Date	Name
△			
△			

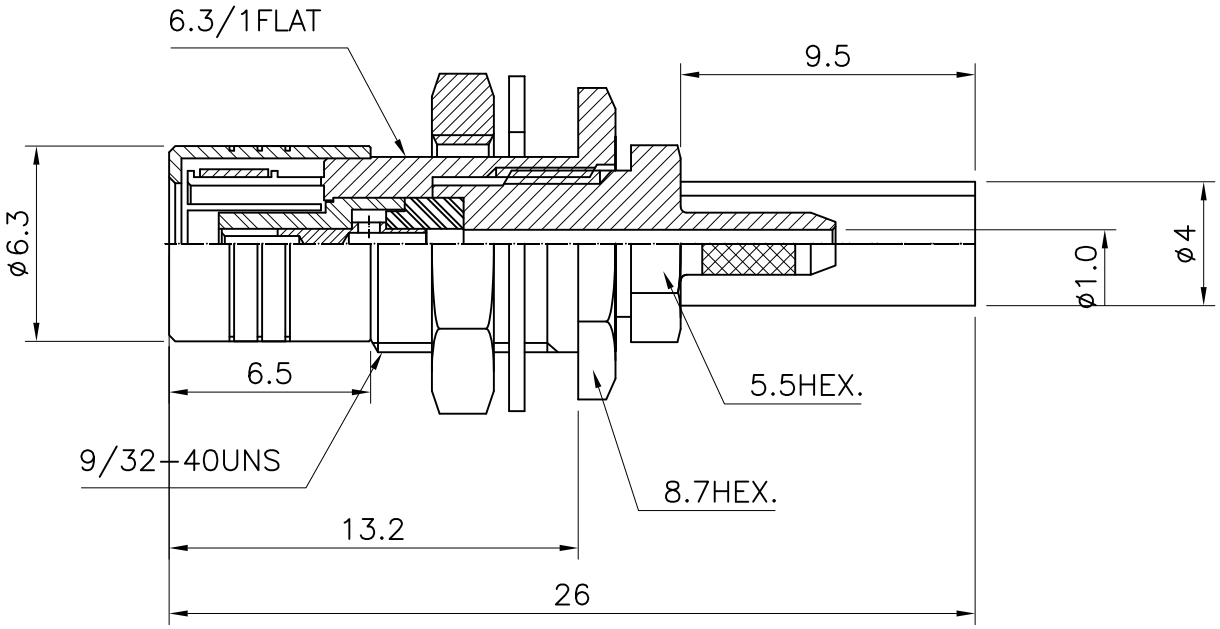

SLB-Bulkhead Mounted
Straight female Cable PLUG-RG178
(Captive contact)

Connector parts	Materials	Finish
Body	BRASS	Gold Plated
Nut,Washer	BRASS	Gold Plated
Center contact	Beryllium copper	Gold Plated
Insulator	Teflon	
Ferrlue	BRASS	Gold Plated

NO.	DESCRIPTION	Q'TY	MATERIAL	FINISH	REMARKS.

PARTS No. SLB-410-001	NAME SLB-SBP-178	APPROVED
MATERIAL / FINISH	TOLERANCES OTHERWISE SPEC. ±0.05 ANGLES ±1°	CHECKED
	SCALE / UNIT mm	DESIGNED S.J.LEE
DONGJIN TI.	DWG NO. SLB-410-001	DATE. 08/AUG/2013

CUSTOMER