No.	Revision	Date	Name
1	PN Change from 1S-102SP-00	21/06/2013	B.G.YUN
2	Length Change from 12.0 to 11.3	05/11/2013	B.G.YUN

SPECIFICATIONS

Impedance ; 50ohm

Frequency ; DC~18GHz

V.S.W.R ; 1.25:1

Temperature range : -55°C to +155°C

2002/95/EC (RoHS) : Compliant

RoHS Compliant

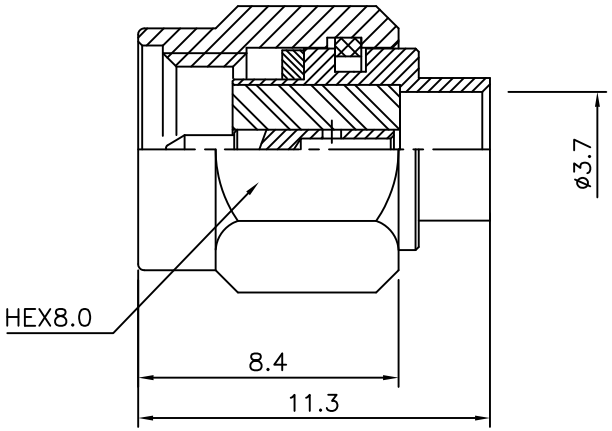

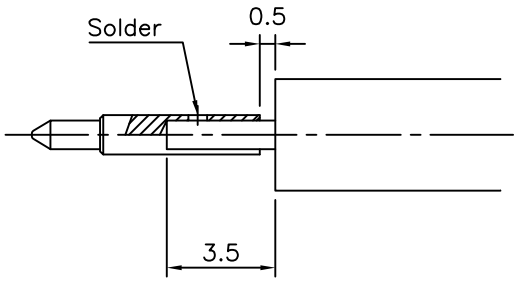

CENTER CONTACT ASS'Y

Connector parts	Materials	Finish
Coupling Cap	Stainless steel	Passivated
Body	Stainless steel	Gold Plated
Center contact	Brass	Gold Plated
Insulator	PTFE	–
Gasket	Silicone rubber	–

SMA-Straight-PLUG
for Cable-UT141

NO.	DESCRIPTION	Q'TY	MATERIAL	FINISH	REMARKS.
PARTS No. SMA-102-014		NAME SMA-SP-141			APPROVED
MATERIAL	FINISH	TOLERANCES OTHERWISE SPEC. ±0.05 ANGLES ±1°			CHECKED
		SCALE	UNIT mm		DESIGNED S.J.LEE
CUSTOMER	DONGJIN TI.	DWG NO. SMA-102-014			DATE. 21/SEP/2011