No.	Revision	Date	Name
1	PN Change from 1S-102-31831	12/11/2013	B.G.YUN

RoHS Compliant

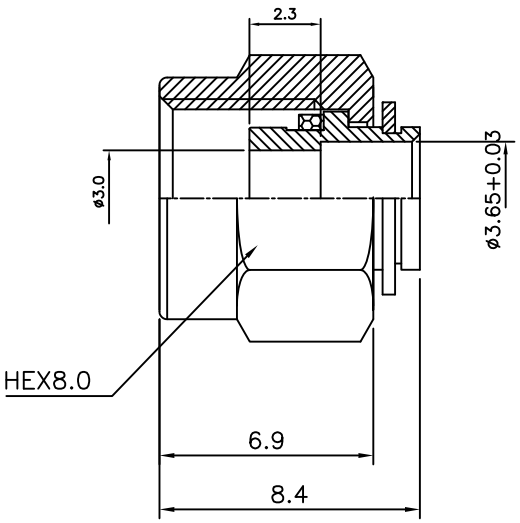

SMA-Straight-PLUG
for Cable-UT141
*(Use cable for center contact)

Connector parts	Materials	Finish
Coupling Cap	Brass	Gold Plated
Body	Brass	Gold Plated
Gasket	Silicone rubber	–
E-Ring	Stainless steel	Gold Plated

NO.	DESCRIPTION	Q'TY	MATERIAL	FINISH	REMARKS.
PARTS No. SMA-102-015		NAME SMA-SP-141			APPROVED
MATERIAL	FINISH	TOLERANCES OTHERWISE SPEC. ±0.05 ANGLES ±1°			CHECKED
		SCALE	UNIT mm		DESIGNED S.J.LEE
		DWG NO. SMA-102-015			DATE. 11/MAR/2011

CUSTOMER

DONGJIN TI.