No.	Revision	Date	Name
1	PN Change from 1S-111-00N	24/06/2013	B.G.YUN

SPECIFICATIONS

Impedance ; 50ohm

Frequency ; DC~12.4GHz

Temperature range : -55°C to +155°C

2002/95/EC (RoHS) : Compliant

RoHS Compliant

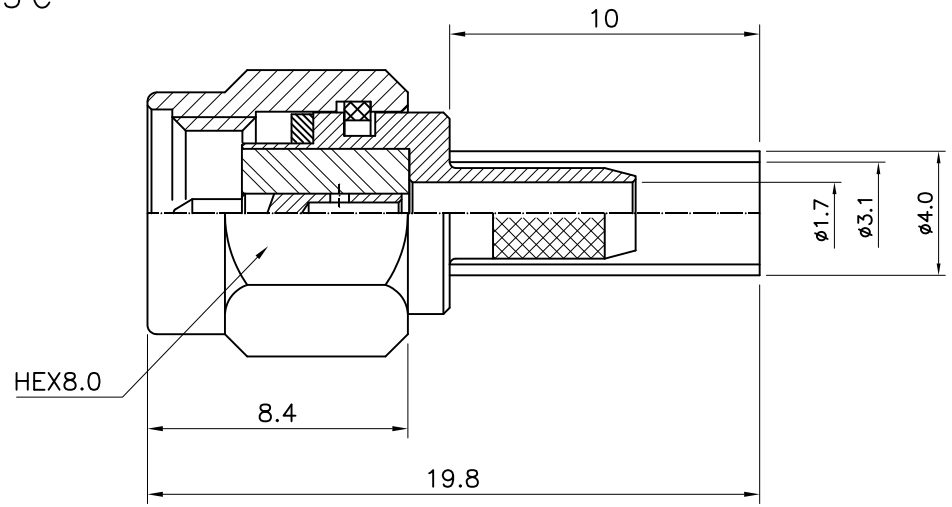

SMA-Stright-PLUG
Crimp Type for Cable:RG316/U

Connector parts	Materials	Finish
Coupling Cap	Brass	Nickel Plated
Body	Brass	Nickel Plated
Center contact	Brass	Gold Plated
Ferrule	Brass	Nickel Plated
Insulator	PTFE	-
Gasket	Silicone rubber	-

NO.	DESCRIPTION	Q'TY	MATERIAL	FINISH	REMARKS.

PARTS No. SMA-111-007	NAME SMA-SP-RG316	APPROVED
MATERIAL / FINISH	TOLERANCES OTHERWISE SPEC. ±0.05 ANGLES ±1°	CHECKED
	SCALE N/S / UNIT mm	DESIGNED S.J.LEE
DONGJIN TI.	DWG NO. SMA-111-007	DATE. 24/NOV/2006

CUSTOMER