No.	Revision	Date	Name
△			
△			

RoHS Compliant

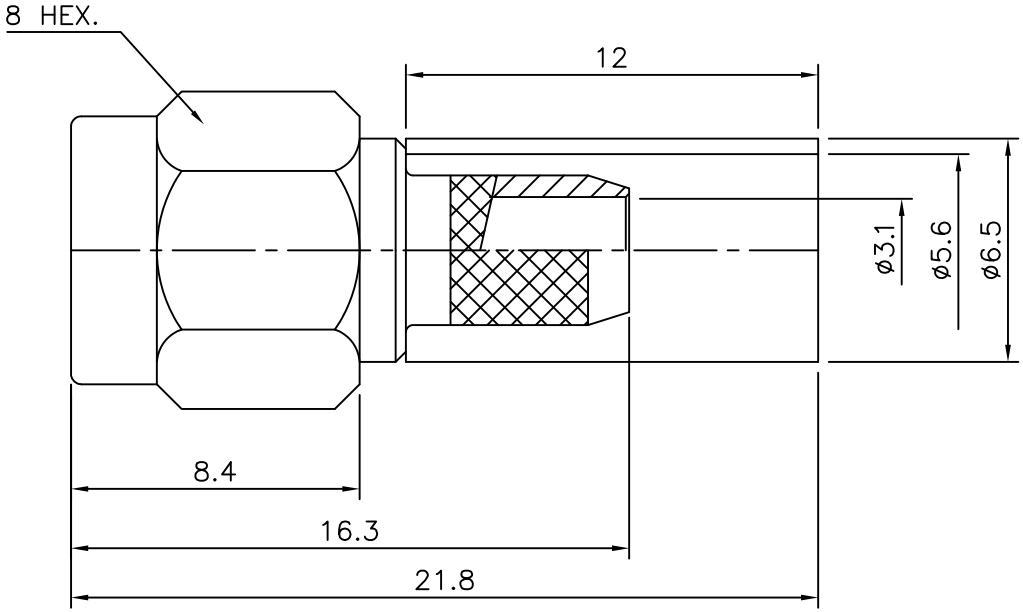

SMA–Stright–PLUG
for Cable:RG400,142

Connector parts	Materials	Finish
Coupling Cap	Stainless steel	Passivated
Body	Brass	Gold Plated
Center contact	Brass	Gold Plated
Ferrule	Brass	Gold Plated
Insulator	PTFE	–

NO.	DESCRIPTION	Q'TY	MATERIAL	FINISH	REMARKS.
PARTS No. SMA–112–004		NAME SMA–SP 400			APPROVED
MATERIAL	FINISH	TOLERANCES OTHERWISE SPEC. ±0.05 ANGLES ±1°			CHECKED
		SCALE N/S	UNIT mm		DESIGNED S.J.LEE
		DWG NO. SMA–112–004			DATE. 27/JAN/2007

CUSTOMER

DONGJIN TI.