No.	Revision	Date	Name
1	P/N Change from 1S-112-00N	19/JUN/2013	M.K.KIM

RoHS Compliant

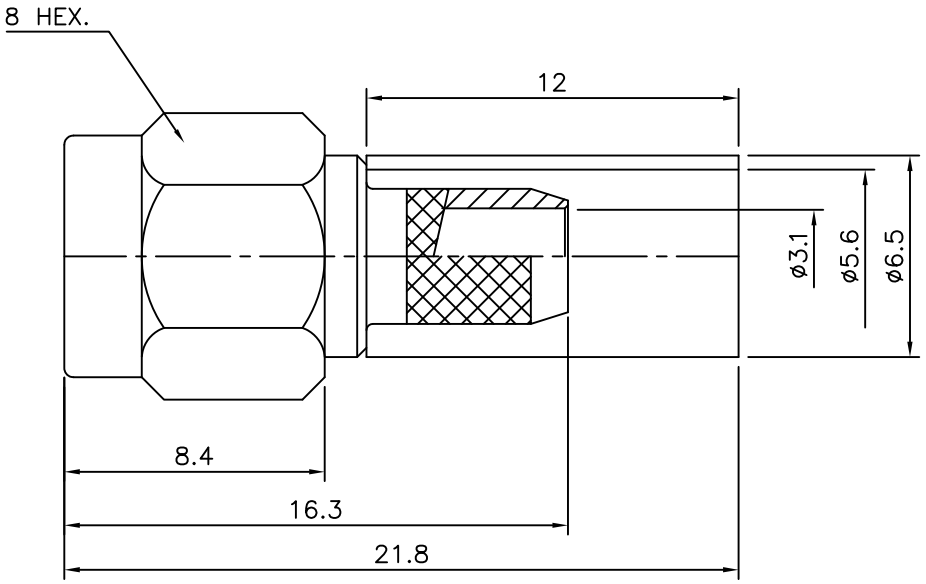

SMA-Stright-PLUG
for Cable:RG400,142,223

Connector parts	Materials	Finish
Coupling Cap	Brass	Nickel Plated
Body	Brass	Nickel Plated
Center contact	Brass	Gold Plated
Ferrule	Brass	Nickel Plated
Insulator	PTFE	–
Gasket	Silicone rubber	–

NO.	DESCRIPTION	Q'TY	MATERIAL	FINISH	REMARKS.
PARTS No. SMA-112-016		NAME SMA-ST PLUG400			APPROVED K.Y.SON
MATERIAL	FINISH	TOLERANCES OTHERWISE SPEC. ±0.05 ANGLES ±1°			CHECKED
		SCALE N/S	UNIT mm		DESIGNED M.K.KIM
CUSTOMER	DONGJIN TI.	DWG NO. SMA-112-016			DATE. 19/JUN/2013