No.	Revision	Date	Name
1	PN Change from 1S-112SG-00	10/OCT/2013	S.J.PARK

RoHS Compliant

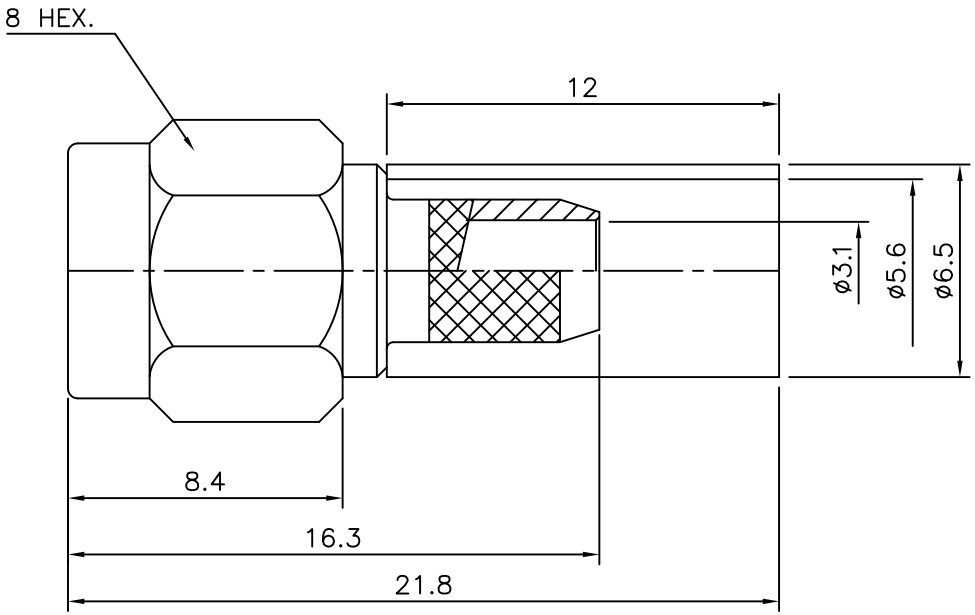

SMA-Stright-PLUG
for Cable:RG400,142

Connector parts	Materials	Finish
Coupling Cap	Stainless steel	Gold Plated
Body	Stainless steel	Gold Plated
Center contact	Brass	Gold Plated
Ferrule	Brass	Gold Plated
Insulator	PTFE	–

NO.	DESCRIPTION	Q'TY	MATERIAL	FINISH	REMARKS.
PARTS No.	SMA-112-020	NAME	SMA-SP400		APPROVED
MATERIAL	FINISH	TOLERANCES OTHERWISE SPEC. ±0.05 ANGLES ±1°			CHECKED
		SCALE N/S	UNIT mm		DESIGNED S.J.LEE
	DONGJIN TI.	DWG NO. SMA-112-020			DATE. 27/JAN/2007

CUSTOMER