No.	Revision	Date	Name
1	Cable entry dia.rev 5.1-->5.6mm	04dec12	sjlee
2	PN Change from 1S-1122S-LL142	04/09/2013	B.G.YUN

SPECIFICATIONS

Impedance : 50 ohm
Frequency Range : DC~18.0GHz
V.S.W.R : 1.20 to 18GHz
Connector Durability : 500 cycles min.
Coupling nut mating torque : 8-10 inch lbs

RoHS Compliant

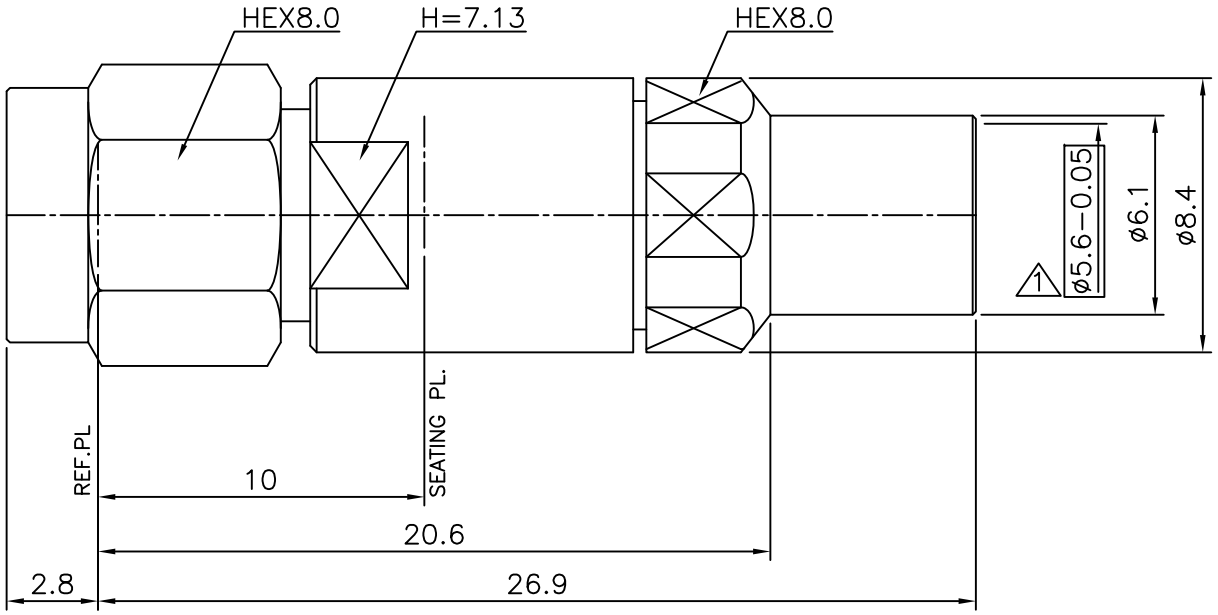

Connector parts	Materials	Finish
Coupling Cap	Stainless steel	Passivated
Body,Clamp nut	Stainless steel	Passivated
Center contact	Beryllium copper	Gold Plated 50microinch.min
Solder ferrule	Brass	Gold Plated 50microinch.min
Lock ring	Stainless steel	Passivated
Insulator	PTFE	-
Gasket,O-Ring	Silicone rubber	-

SMA-Stright-PLUG
for Cable:LL142(Solder Clamp)

NO.	DESCRIPTION	Q'TY	MATERIAL	FINISH	REMARKS.
PARTS No. SMA-116-001		NAME SMA-SP-LL142			APPROVED
MATERIAL	FINISH	TOLERANCES OTHERWISE SPEC. ±0.05 ANGLES ±1°			CHECKED
		SCALE N/S	UNIT mm		DESIGNED S.J.LEE
CUSTOMER	DONGJIN TI.	DWG NO. SMA-116-001			DATE. 05/MAR/2012