No.	Revision	Date	Name
△			
△			

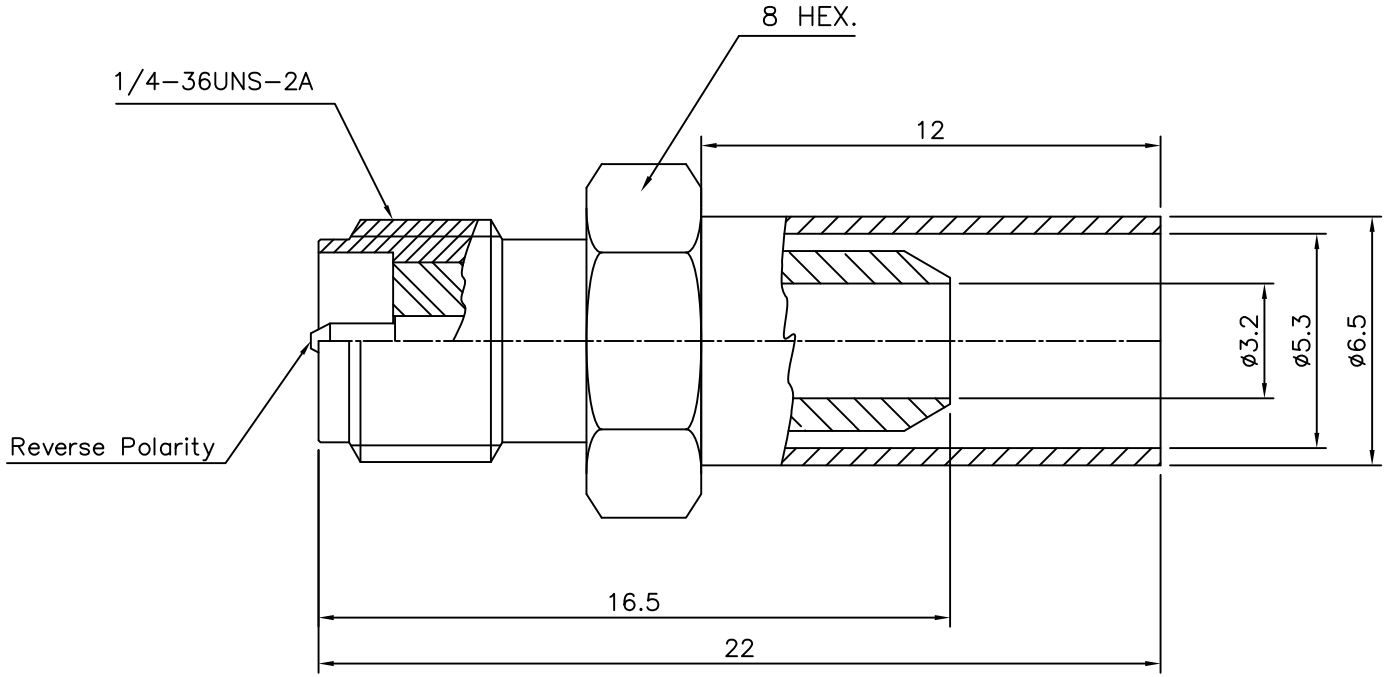

SMA-Stright-JACK
Reverse Polarity
for Cable:RG58

Connector parts	Materials	Finish
Body	Brass	Nickel Plated
Center contact	Brass	Gold Plated
Ferrule	Brass	Nickel Plated
Insulator	PTFE	–

NO.	DESCRIPTION	Q'TY	MATERIAL	FINISH	REMARKS.
PARTS No. SMA-212-009		NAME SMA-SJ-58			APPROVED
MATERIAL	FINISH	TOLERANCES OTHERWISE SPEC. ±0.05 ANGLES ±1°			CHECKED
		SCALE N/S	UNIT mm		DESIGNED S.J.LEE
CUSTOMER	DONGJIN TI.	DWG NO. SMA-212-009			DATE. 2001.05/04