No.	Revision	Date	Name
1	PN Change from 1S-417-141	10/FEB/2014	S.J.PARK

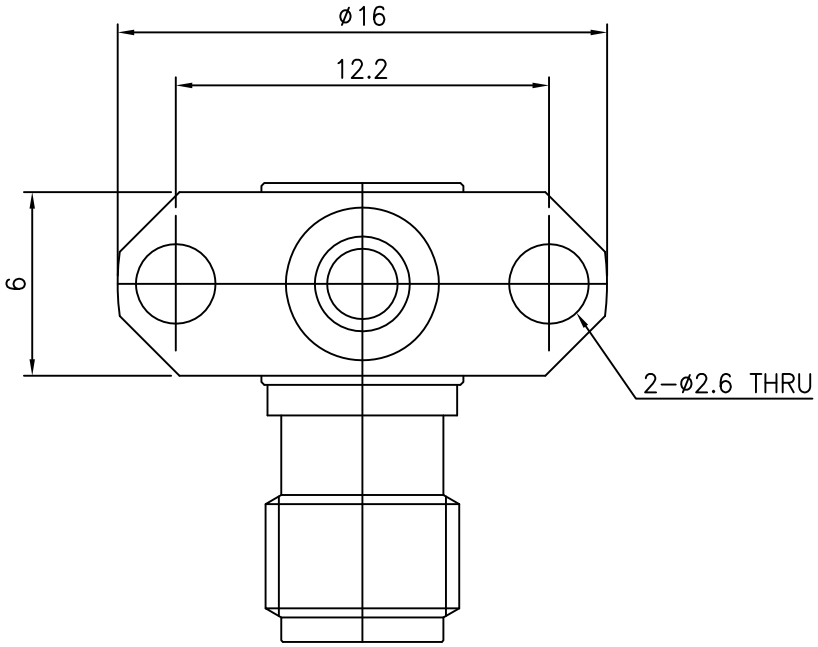

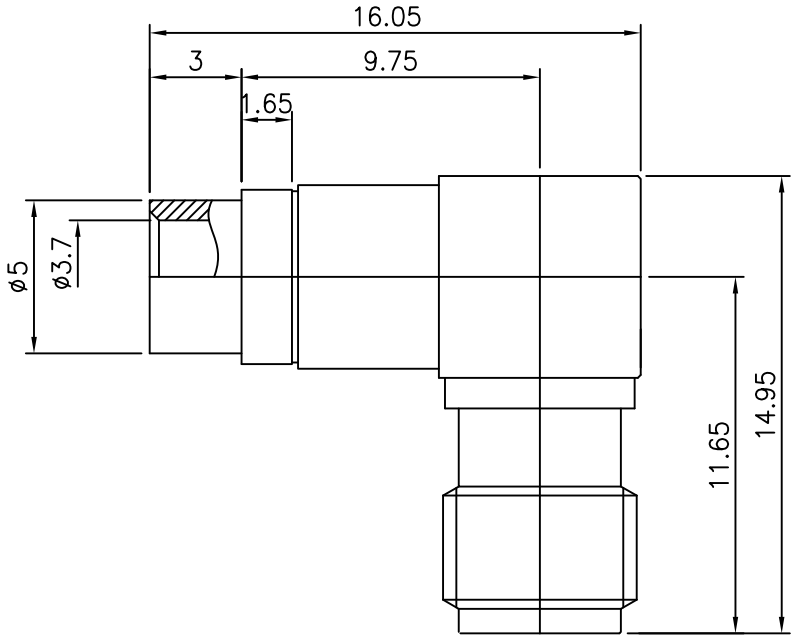

SMA Raight Angle PANEL-2H JACK
for Cable-UT141

Item	Materials	Plating
Body	Brass	Gold Plated
Center contact	Beryllium copper	Gold Plated
Insulator	TEFLON	-

NO.	DESCRIPTION	Q'TY	MATERIAL	FINISH	REMARKS.

PARTS No. SMA-402-005	NAME SMA-LJ 2H-141		APPROVED
MATERIAL	FINISH	TOLERANCES OTHERWISE SPEC. ±0.05 ANGLES ±1°	CHECKED
		SCALE N/S / UNIT mm	DESIGNED S.J.LEE
		DWG NO. SMA-402-005	DATE. 27/DEC/2005

CUSTOMER

DONGJIN TI.