No.	Revision	Date	Name
1	PN Change from 1S-411-01	18/06/2013	B.G.YUN

SPECIFICATIONS.

1.1 Impedonce: 50ohm
1.2 Frequency Range: per cable per MIL-C-17
1.3 Working Voltage rating: 335 Vrms
1.4 Dieictric Withstanding Voltage: 1000 Vrms
1.5 VSWR: 1.2:1 Max
1.6 Insulation Resistance: 5,000 megohms
1.7 Connector Durability: 500 mating
1.8 Temperature Range: -45°C~+155°C

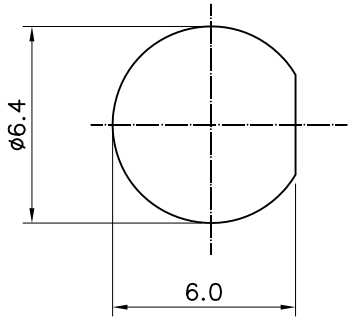

MOUNT HOLES

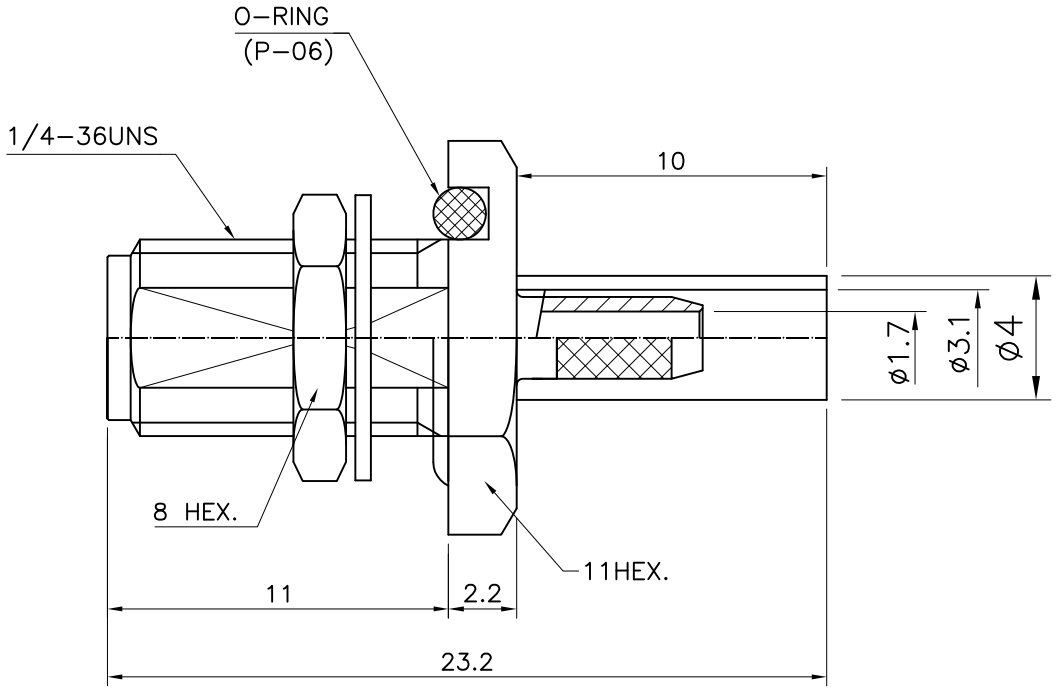

SMA-Bulkhead JACK with SEAL
for Cable-RG316

Connector parts	Materials	Finish
Body	Brass	Gold Plated
Center contact	Beryllium copper	Gold Plated
Insulator	PTFE	-
O-Ring	Silicone Rubber	-

NO.	DESCRIPTION	Q'TY	MATERIAL	FINISH	REMARKS.

PARTS No. SMA-411-002	NAME SMA-BJ-316 SEAL	APPROVED
MATERIAL / FINISH	TOLERANCES OTHERWISE SPEC. ±0.05 ANGLES ±1°	CHECKED
	SCALE / UNIT mm	DESIGNED S.J.LEE
CUSTOMER	DONGJIN TI. / DWG NO. SMA-411-002	DATE. 2001.05/22