No.	Revision	Date	Name
1	PN Change from 1S-512-W160	10/FEB/2014	S.J.PARK

ELECTRICAL RATINGS

Impedance : 50 ohm
Frequency Range : DC~18GHz
Insulation Resistance : 5000MΩ min
Contact Resistance : < 3mΩ
Working Voltage : 335 VRMS max
Dielectric Withstanding Voltage : 1000V min

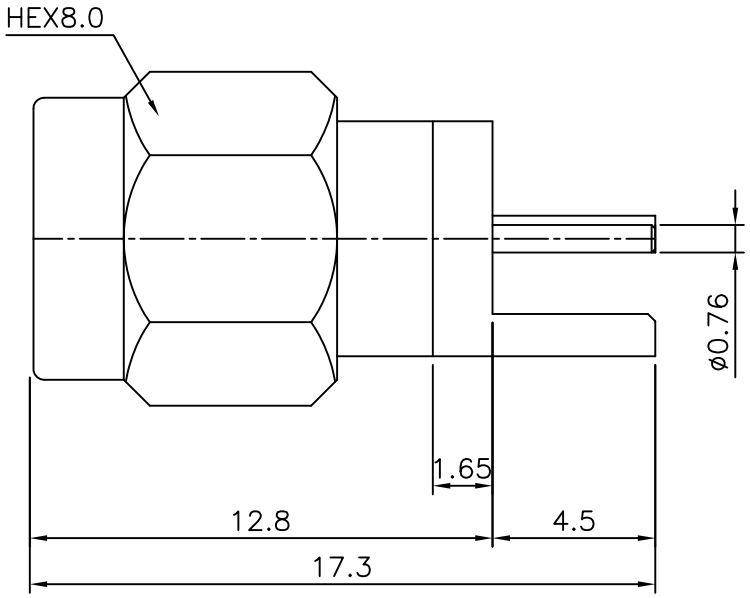

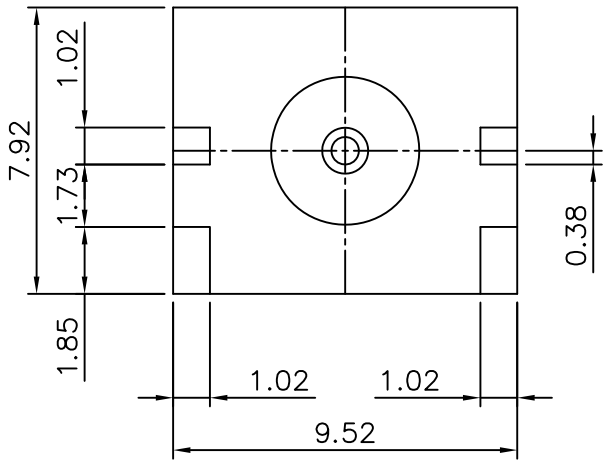

Connector parts	Materials	Finish
Coupling Cap	Brass	Gold Plated
Body	Brass	Gold Plated
Center contact	Brass	Gold Plated
Insulator	TEFLON	–

SMA PCB Eage Mount Plug Receptacle
–Round Contact(1.60mm Board)

NO.	DESCRIPTION	Q'TY	MATERIAL	FINISH	REMARKS.
PARTS No. SMA-603-002		NAME SMA-SP-PCB			APPROVED
MATERIAL	FINISH	TOLERANCES OTHERWISE SPEC. ±0.05 ANGLES ±1°			CHECKED
		SCALE	UNIT mm		DESIGNED S.J.LEE
		DWG NO. SMA-603-002			DATE. 2003/1/10

CUSTOMER

DONGJIN TI.