No.	Revision	Date	Name
△			
△			

RoHS Compliant

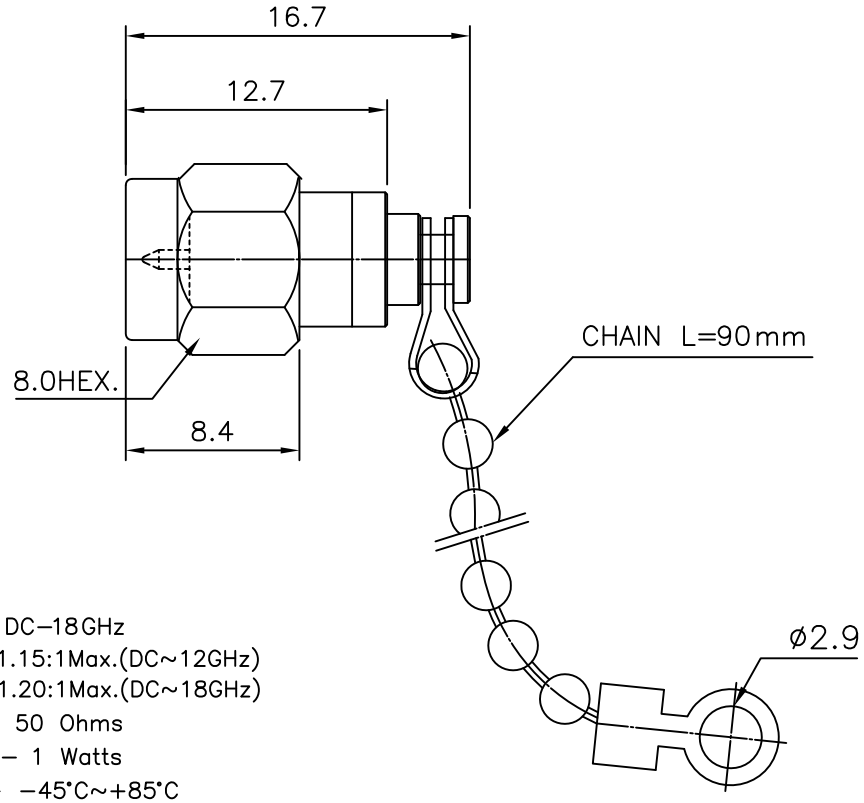

SPECFICATIONS

Frequency Range------ DC–18GHz
VSWR----------1.15:1Max.(DC~12GHz)
1.20:1Max.(DC~18GHz)
Impedance---------- 50 Ohms
Power Rating---------- 1 Watts
Oper Temp Range------ –45°C~+85°C

SMA–PLUG
TERMINATION with CHAIN

Connector parts	Materials	Finish
Coupling Cap	Stainless steel	Passivated
Body	Stainless steel	Passivated
Center contact	Brass	Gold Plated
Insulator	PTFE	–
Gasket	Silicone Rubber	–
Chain, Rivet	Brass	Nickel Plated

NO.	DESCRIPTION	Q'TY	MATERIAL	FINISH	REMARKS.
PARTS No. SMA–901–025		NAME SMA–SP TERMINATION			APPROVED
MATERIAL	FINISH	TOLERANCES OTHERWISE SPEC. ±0.05 ANGLES ±1°			CHECKED
		SCALE	UNIT mm		DESIGNED S.J.LEE
		DWG NO. SMA–901–025			DATE. 11/DEC/2013

CUSTOMER

DONGJIN TI.