No.	Revision	Date	Name
1	PN Change from 1T-112RP-00	14/MAR/2014	S.J.PARK

RoHS Compliant

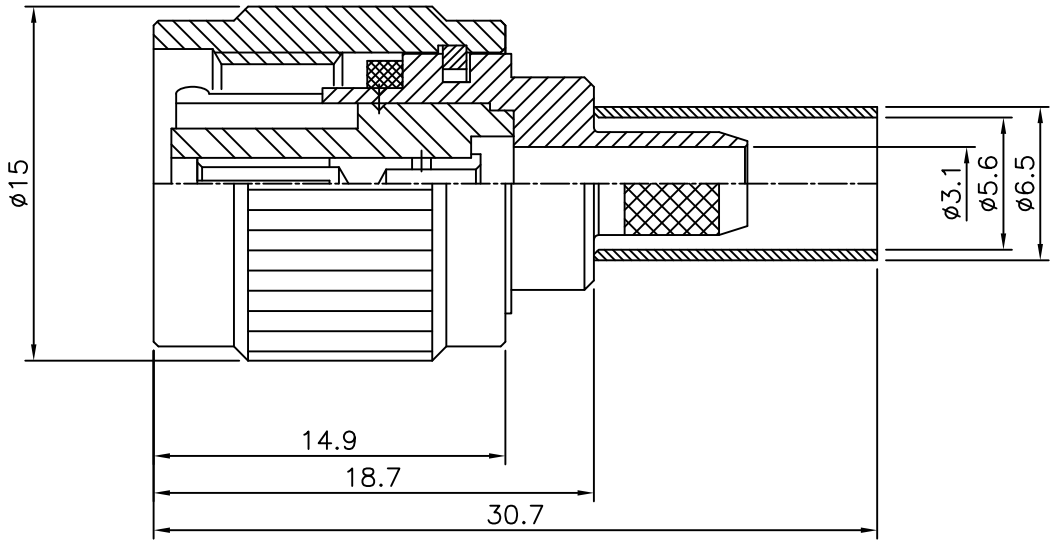

Connector parts	Materials	Finish
Coupling Cap	Brass	Nickel Plated
Body	Brass	Nickel Plated
Center contact	Beryllium copper	Gold Plated
Insulator	TEFLON	–
Ferrule	Brass	Nickel Plated
Gasket	Silicone rubber	–

TNC Straight PLUG
REVERSE POLARITY
For CABLE RG400

NO.	DESCRIPTION	Q'TY	MATERIAL	FINISH	REMARKS.
PARTS No. TNC-112-002		NAME TNC-SP-RG400/R.P			APPROVED
MATERIAL	FINISH	TOLERANCES OTHERWISE SPEC. ±0.05 ANGLES ±1°			CHECKED
		SCALE	UNIT mm		DESIGNED S.J.LEE
		DWG NO. TNC-112-002			DATE. 25/MAY/2006

CUSTOMER

DONGJIN TI.