| No. | Revision | Date | Name |
|---|---|---|---|
| 1 | PN Change from 1T-114-04 | 31/07/2013 | B.G.YUN |
| | | | |

SPECIFICATIONS

Impedance ; 50ohm

Frequency ; DC~4GHz

Working Voltage; 500 VRMS

VSWR ; max 1.25:1 UP TO 3.0GHz

Temperature range : -40°C to +85°C

RoHS Compliant

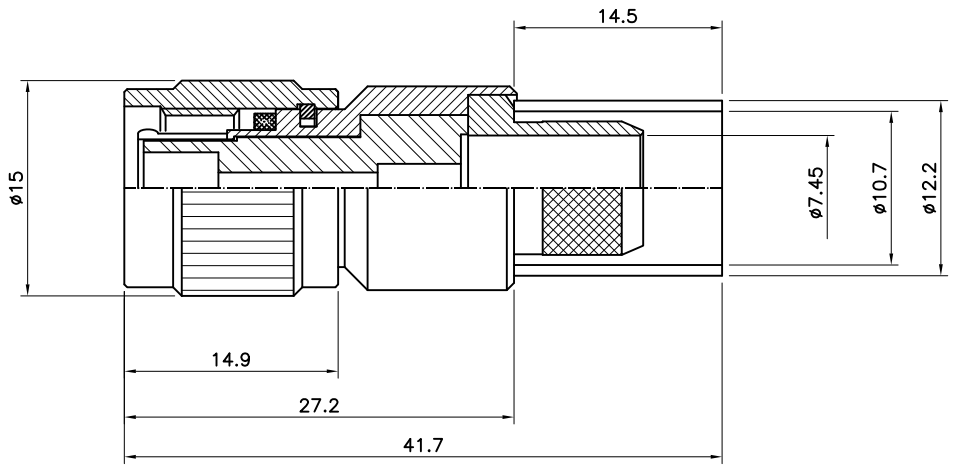


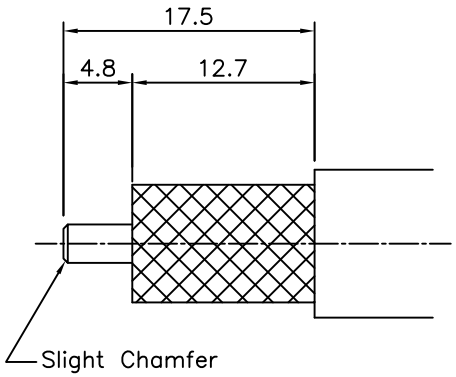


Recommended Stripping DIM'S

Recommended Crimp DIES : HEX10.7

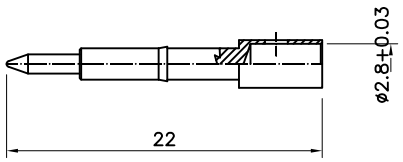


Center contact

TNC Straight PLUG
For CABLE LMR400,RG8,213

| Connector parts | Materials | Finish |
|---|---|---|
| Coupling Cap | Brass | Nickel Plated |
| Body | Brass | Nickel Plated |
| Center contact | Brass | Gold Plated |
| Insulator | TEFLON | – |
| Ferrule | Brass | Nickel Plated |

| NO. | DESCRIPTION | Q'TY | MATERIAL | FINISH | REMARKS. |
|---|---|---|---|---|---|

| | | |
|---|---|---|
| PARTS No. TNC-114-001 | NAME TNC-SP-LMR400 | APPROVED |
| MATERIAL / FINISH | TOLERANCES OTHERWISE SPEC. ±0.05 ANGLES ±1° | CHECKED |
| | SCALE / UNIT mm | DESIGNED S.J.LEE |
| CUSTOMER | DONGJIN TI. / DWG NO. TNC-114-001 | DATE. 03/FEB/2002 |